Product Specs Sheets

Cover Page

WSBC 0280

Features

- Bathroom Sink
- Made of Solid Brass or Solid Copper Base
- Multi-Layer Coating of the Finish
- With Overflow
- Under Mount or Self-Rimming Installation
- Made in France
- Special Order (Non-Returnable)

Related Items:

- WSBC 53991 | Push Waste Drain
- WSBC 53922 | Decorative Trap

Finishes:

Polished Chrome

Polished Nickel

Polished Gold

SKU# | Options:

- WSBC 0280.08 | Polished Chrome
- WSBC 0280.05 | Polished Nickel
- WSBC 0280.13 | Polished Gold

*** WS Bath Collections reserves the right to revise dimensions or information on this sheet without notice**

Collections | Metal	**Model** | WSBC 0280	Dimensions Metric *1 inch = 2.54 cm* *1 inch = 25.4 mm*	WS® BATH COLLECTIONS 1051 Lea Drive - Collegeville, PA 19426 Tel. 215 513 9400 - Fax 610 831 0215 www.wsbathcollections.com - info@wsbathcollections.com

Product Specs Sheets

WSBC 0280

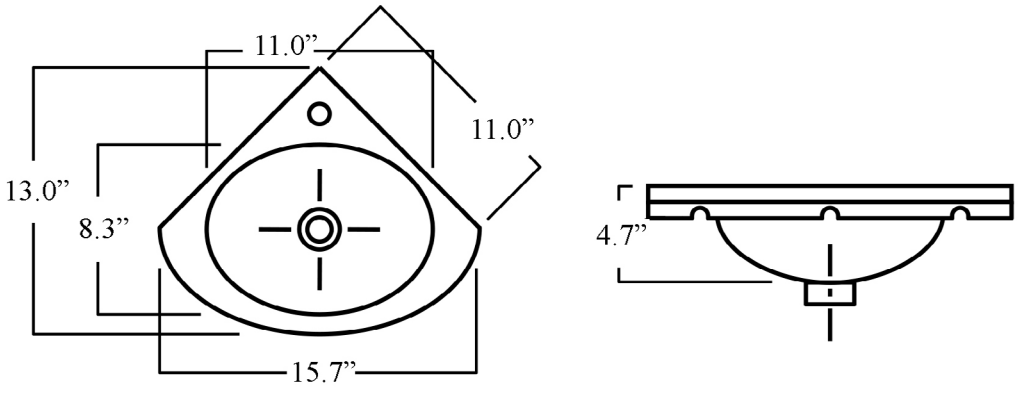

Collection |	**Model** |	Dimensions Metric	
Metal	WSBC 0280	*1 inch = 2.54 cm* *1 inch = 25.4 mm*	WS® BATH COLLECTIONS 1051 Lea Drive - Collegeville, PA 19426 Tel. 215 513 9400 - Fax 610 831 0215 www.wsbathcollections.com - info@wsbathcollectins.com

We recommend the following items that work with your sink.

WSBC 0280

TRAPS

WSBC 53922
Our best seller

Polished Chrome
WSBC 53922.29

Matte Black
WSBC 53922.22

WSBC 5392

Polished Chrome
WSBC 5392.29

WSBC 53925

Polished Chrome
WSBC 53925.29

WSBC 53921
Space saving

Polished Chrome
WSBC 53921.29

Matte Black
WSBC 53921.22

DRAINS

WSBC 53991
Push waste drain (click clack)
with overflow

Polished Chrome
WSBC 53991.29

Glossy White
WSBC 53991.09

Glossy Black
WSBC 53991.18

Matte White
WSBC 53991.26

Matte Black
WSBC 53991.22

MOUNTING HARDWARE

Wall-mount installation

Bolts

Vessel/ countertop installation

Silicone *(optional)*

Collection	Model	Dimensions Metric	
Metal	WSBC 0280	*1 inch = 2.54 cm* *1 inch = 25.4 mm*	WS® BATH COLLECTIONS 1051 Lea Drive - Collegeville, PA 19426 Tel. 215 513 9400 - Fax 610 831 0215 www.wsbathcollections.com - info@wsbathcollections.com

WSBC 0280

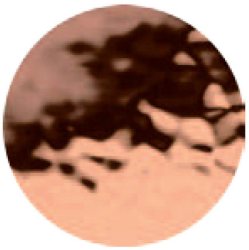

01 | Cuivre Rouge
Solid Red Copper

02 | Cuivre Vieilli
Antique Copper

FINISHES

Group 1

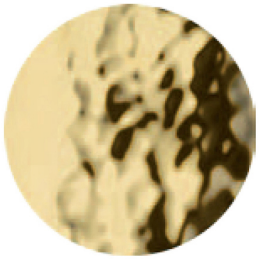

03 | Laiton Brillant
Shiny Solid Brass

04 | Laiton Vieilli
Antique Brass

08 | Chrome Brillant
Shiny Chrome

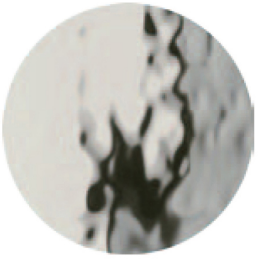

05 | Nickel Brillant
Shiny Nickel

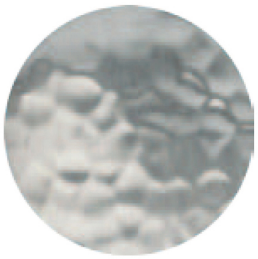

06 | Nickel Mat
Mat Nickel

Collection | Metal	**Model** | WSBC 0280	Dimensions Metric *1 inch = 2.54 cm* *1 inch = 25.4 mm*	WS® BATH COLLECTIONS 1051 Lea Drive - Collegeville, PA 19426 Tel. 215 513 9400 - Fax 610 831 0215 www.wsbathcollections.com - info@wsbathcollections.com

FINISHES

Group 2

13 | Dorure Brillante
Shiny Gold

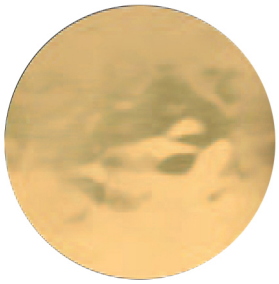

14 | Dorure Mat
Mat Gold

Collection |	Model |	Dimensions Metric	
Metal	WSBC 0280	*1 inch = 2.54 cm* *1 inch = 25.4 mm*	WS® BATH COLLECTIONS 1051 Lea Drive - Collegeville, PA 19426 Tel. 215 513 9400 - Fax 610 831 0215 www.wsbathcollections.com - info@wsbathcollections.com