Product Specs Sheets

Cover Page

Ambra 60F Pack 2 S03

Features

- Complete Vanity Unit with Lighted Mirror (Simply L00300) and Ambra Column
- Available in 4 Finishes: Glossy White, Nordic Oak, Anthracite, and Samara Ash
- Free Standing Installation with Four Legs in Bright Chrome
- Two soft close drawers with organizer in upper drawer
- Includes integrated sink and vanity top in gloss white ceramic with faucet hole and overflow
- Column with soft close doors with 105 deg opening capability for easy cabinet access
- Fully assembled structure and front made of engineered wood in wood finishes and high gloss lacquered
- Handle integrated in front of furniture
- Hidden hanging bracket directly assembled with great resistance and depth regulations
- Made in Spain

Related Items:

- WSBC 53991 | Push Waste Drain
- WSBC 53922 | Decorative Trap

Finishes

- Nordic Oak
- Samara Ash
- Glossy White
- Anthracite

SKU# | Options

- Ambra 60F Pack 2 S03 NO | Nordic Oak
- Ambra 60F Pack 2 S03 SA | Samara Ash
- Ambra 60F Pack 2 S03 WG | Glossy White
- Ambra 60F Pack 2 S03 AN | Anthracite

*** WS Bath Collections reserves the right to revise dimensions or information on this sheet without notice**

Collection	Model |	Dimensions Metric	
Ambra	Ambra 60F Pack 2 S03	*1 inch = 2.54 cm* *1 inch = 25.4 mm*	WS® BATH COLLECTIONS 1051 Lea Drive - Collegeville, PA 19426 Tel. 215 513 9400 - Fax 610 831 0215 www.wsbathcollections.com - info@wsbathcollections.com

Product Specs Sheets

Technical features

Technical drawing	Name	Material	Colour	Colour
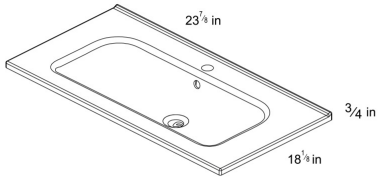	**SLIM**			Gloss White
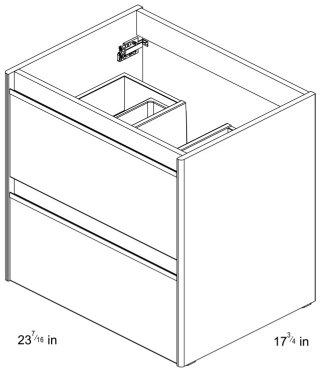	**AMBRA** 2 Drawers	CYC		Nordic Oak
		CYC		Samara Ash
		CYC		Gloss White
		CYC		Anthracite
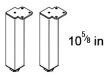	**LEGS**			Chrome

Technical information

STRUCTURE	MDF board in 5⁄8 in. continous wrapping in 2D/ Cyclum Process.
FRONT	MDF board in 5⁄8 in. continous wrapping in 2D/ Cyclum Process.
HANDLE	Integrated in the front of the furniture.
DRAWER	Drawers made in mokka textile polylaminate coated board with hidden parcial extraction runners with soft close system. Lower drawer useful space (widexhighxdepth): $20^{1/16}$ x $4^{5/16}$ x $12^{2/4}$ in.
WALL HANGING BRACKET	Hidden hanging bracket of directly assembled with great resistance and depth regulations.
LEGS	Metallic in bright chrome finish. (optional)
PIPE DEPTH	Pipe depth $2^{1/54}$ in.

WS® BATH COLLECTIONS
1051 Lea Drive - Collegeville, PA 19426
Tel. 215 513 9400 - Fax 610 831 0215
www.wsbathcollections.com - info@wsbathcollections.com

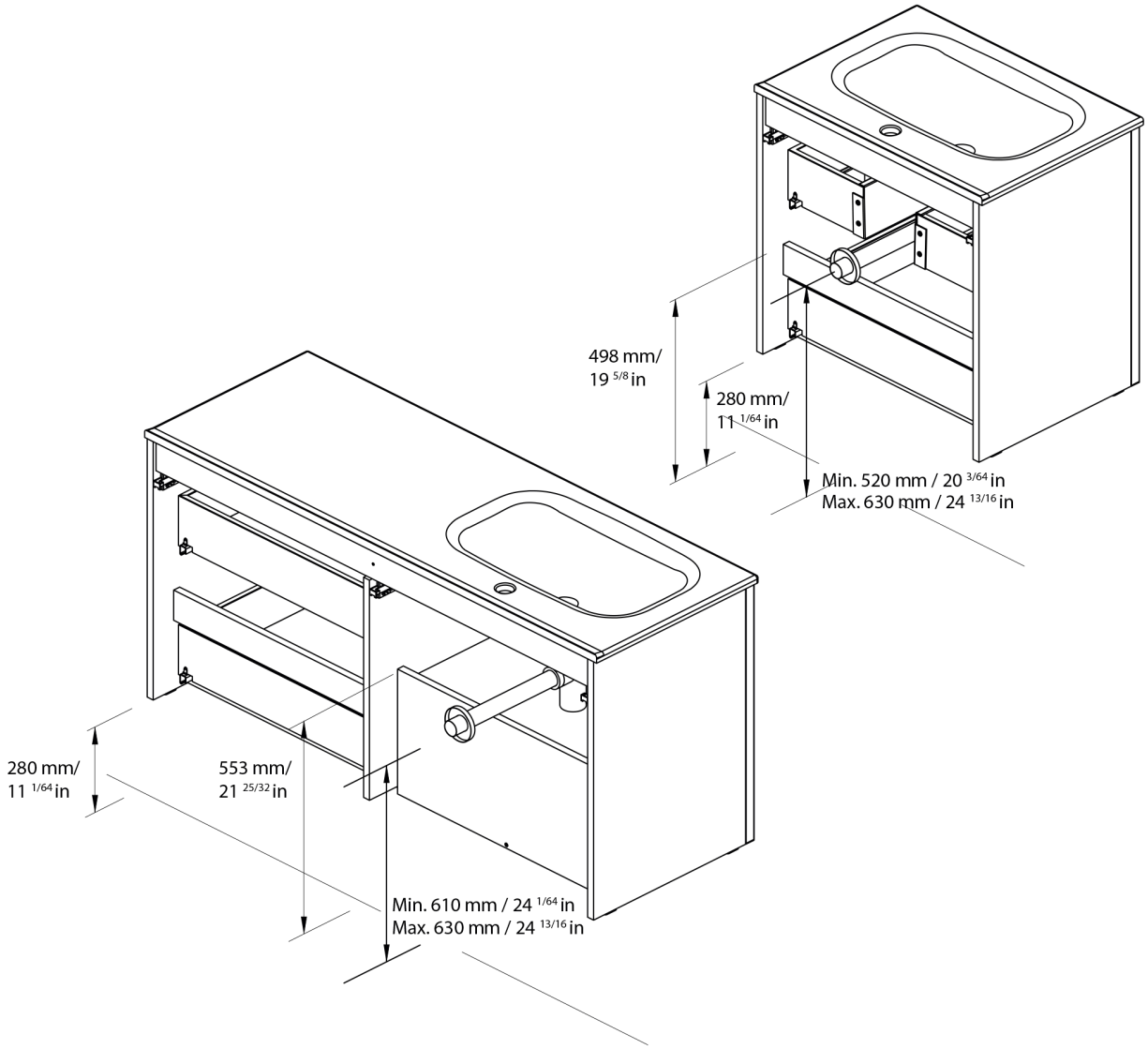

ES	EN
Las cotas indicadas en los dibujos son en función de la altura de la pata del conjunto, en caso de que el mueble vaya suspendido y esta altura no se respete, dichas cotas también variarán.	Dimensions indicated in the drawing are based on the level of the whole leg, in case of wall hanging the furniture dimensions also may vary.

WS® BATH COLLECTIONS
1051 Lea Drive - Collegeville, PA 19426
Tel. 215 513 9400 - Fax 610 831 0215
www.wsbathcollections.com - info@wsbathcollections.com

TECHNICAL INFORMATION:

The LED's assembled in Italy, are easily replaceable.
110 V, ClasseIII, IP44, LED on rigid support 2 x 5 WATT
measuring 49.5 x 2.5cm
1000 lumens of natural light color (> 4000K)
CE
Comply with the directives 2006/95 / EC and 2004/108 / EC in terms of electrical safety and electromagnetic compatibility

MATERIALS:

High-quality glass,
thickness 4 mm,
ecological production withiout lead and copper.
Structure of anodized aluminium

COMPATUBILITY ENERGY:

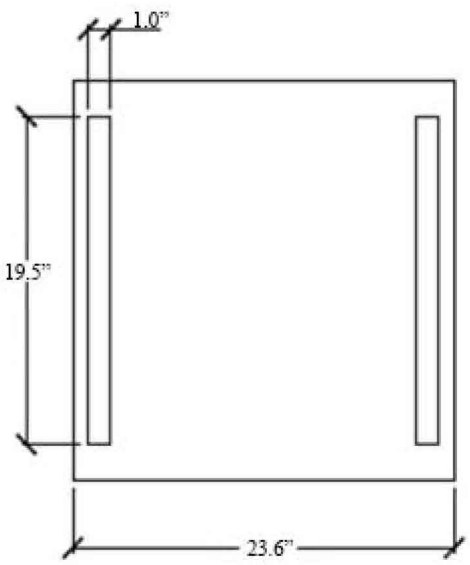

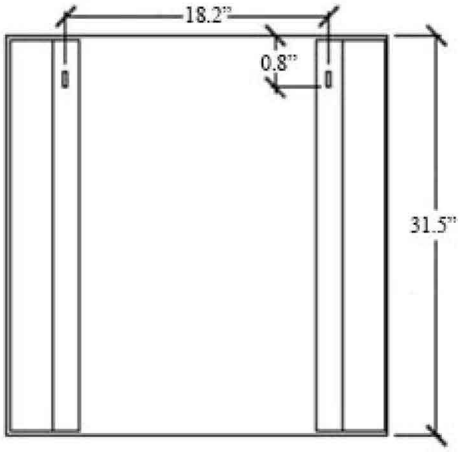

Collection	**Model**	Dimensions Metric	
Simply	Simply L00300	*1 inch = 2.54 cm* *1 inch = 25.4 mm*	WS® BATH COLLECTIONS 1051 Lea Drive - Collegeville, PA 19426 Tel. 215 513 9400 - Fax 610 831 0215 www.wsbathcollections.com - info@wsbathcollections.com

Technical features / Características técnicas

Technical drawing
Dibujo técnico

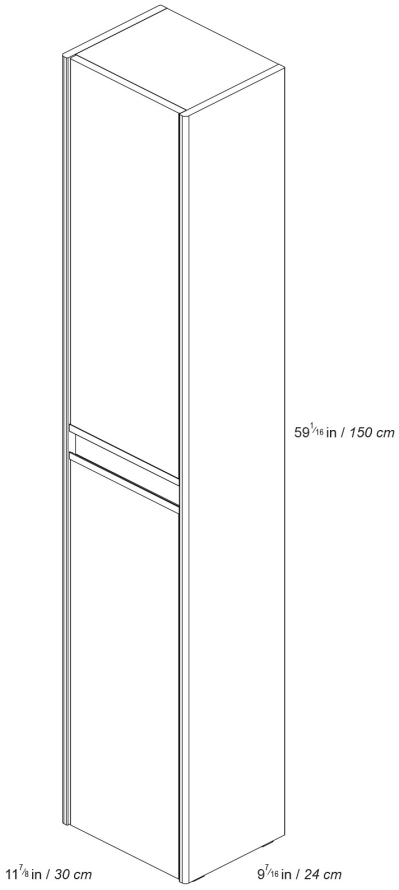

Reversible column / *Columna reversible*

Name *Nombre*	Material *Material*	Colour *Color*
	CYC	
AMBRA 2 Doors *2 Puertas*	CYC	
	CYC	
	CYC	

Technical information / Información técnica

STRUCTURE / *ESTRUCTURA:*	MDF board in 5⁄8 in. continous wrapping in 2D/ Cyclum Process. *Tablero de DM de 16 mm. con recubrimiento 2D Cyclum Process.*
FRONT / *FRENTE:*	MDF board in 5⁄8 in. continous wrapping in 2D/ Cyclum Process. *Tablero de DM de 16 mm. con recubrimiento 2D Cyclum Process.*
HANDLE / *TIRADOR:*	Integrated in the front of the furniture. *Tirador integrado en el frente.*
INTERNAL DISRTIBUTION/ *DISTRIBUCIÓN INTERNA:*	2 mobile wooden shelves and 1 fixed wooden shelf. *2 estantes móviles de madera y 1 estante fijo de madera.*
HINGE / *BISAGRA:*	105° opening, Ø1 3/8 in. cap, easy assembly and soft close system. *105° de apertura, cazoleta de Ø35 mm., montaje rápido y cierre amortiguado incorporado.*

Collection Ambra	**Model** Ambra Column	Dimensions Metric *1 inch = 2.54 cm* *1 inch = 25.4 mm*	WS BATH COLLECTIONS 1051 Lea Drive - Collegeville, PA 19426 Tel. 215 513 9400 - Fax 610 831 0215 www.wsbathcollections.com - info@wsbathcollections.com

We recommend the following items that work with your sink.

Ambra 60F Pack 2 S03

TRAPS

WSBC 53922
Our best seller

Polished Chrome
WSBC 53922.29

Matte Black
WSBC 53922.22

WSBC 5392

Polished Chrome
WSBC 5392.29

WSBC 53925

Polished Chrome
WSBC 53925.29

WSBC 53921
Space saving

Polished Chrome
WSBC 53921.29

Matte Black
WSBC 53921.22

DRAINS

WSBC 53991
Push waste drain (click clack)
with overflow

Polished Chrome
WSBC 53991.29

Matte Black
WSBC 53991.22

MOUNTING HARDWARE

Wall-mount installation

Bolts

Vessel/ countertop installation

Silicone *(optional)*

Collection	**Model**	Dimensions Metric	
Ambra	Ambra 60F Pack 2 S03	*1 inch = 2.54 cm* *1 inch = 25.4 mm*	WS® BATH COLLECTIONS 1051 Lea Drive - Collegeville, PA 19426 Tel. 215 513 9400 - Fax 610 831 0215 www.wsbathcollections.com - info@wsbathcollections.com