Product Specs Sheets

Cover Page

Cameo 75.40 - CML03

Features

- Bathroom Ceramic Sink
- Available in 4 Main Finishes: Glossy White, Glossy Black, Matte White and Matte Black
- Also Available in Many Other Finishes (Special Order - Call for Details)
- Countertop (Vessel) Installation
- Without Overflow
- Design+
- Designed by Prospero Rasulo
- Made in Italy

Related Items:

- WSBC 00076 | Push Waste Drain
- WSBC 53922 | Decorative Trap

Finishes:

- Glossy White
- Matte White
- Glossy Black
- Matte Black

SKU# | Options:

- Cameo 75.40 WG | Glossy White
- Cameo 75.40 WM | Matte White
- Cameo 75.40 BG | Glossy Black
- Cameo 75.40 BM | Matte Black

*** WS Bath Collections reserves the right to revise dimensions or information on this sheet without notice**

Collection |	**Model |**	Dimensions Metric	
Cameo	Cameo 75.40 - CML03	*1 inch = 2.54 cm* *1 inch = 25.4 mm*	WS® BATH COLLECTIONS 1051 Lea Drive - Collegeville, PA 19426 Tel. 215 513 9400 - Fax 610 831 0215 www.wsbathcollections.com - info@wsbathcollections.com

Product Specs Sheets

Cameo 75.40 - CML03

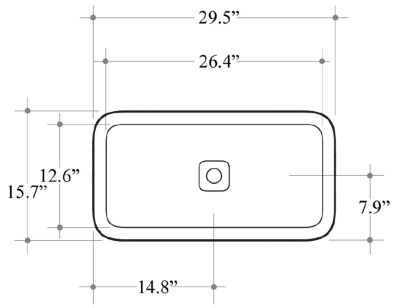

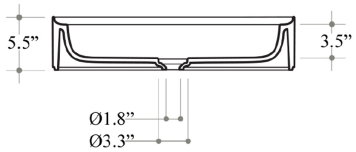

Vessel

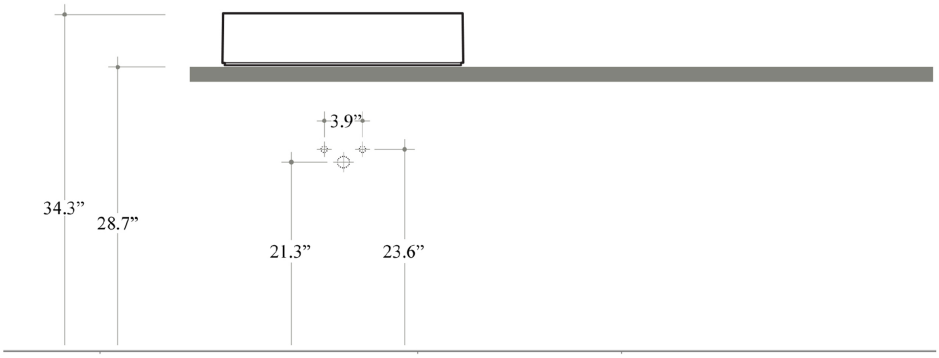

Collection |	Model |	Dimensions Metric	
Cameo	Cameo 75.40 - CML03	*1 inch = 2.54 cm* *1 inch = 25.4 mm*	WS® BATH COLLECTIONS 1051 Lea Drive - Collegeville, PA 19426 Tel. 215 513 9400 - Fax 610 831 0215 www.wsbathcollections.com - info@wsbathcollections.com

Product Specs Sheets

We recommend the following items that work with your sink.

Cameo 75.40 - CML03

TRAPS

WSBC 53922
Our best seller

Polished Chrome
WSBC 53922.29

Matte Black
WSBC 53922.22

WSBC 5392

Polished Chrome
WSBC 5392.29

WSBC 53925

Polished Chrome
WSBC 53925.29

WSBC 53921
Space saving

Polished Chrome
WSBC 53921.29

Matte Black
WSBC 53921.22

DRAINS

WSBC 00076
Push waste drain (click clack) - universal with or without overflow

Polished Chrome
WSBC 00076.29

Glossy Black
WSBC 00076.18

Glossy White
WSBC 00076.09

Matte Black
WSBC 00076.22

Matte White
WSBC 00076.26

MOUNTING HARDWARE

Wall-mount installation

Bolts

Vessel/ countertop installation

Silicone *(optional)*

Collection Cameo	**Model** | Cameo 75.40 - CML03	Dimensions Metric *1 inch = 2.54 cm* *1 inch = 25.4 mm*	WS® BATH COLLECTIONS 1051 Lea Drive - Collegeville, PA 19426 Tel. 215 513 9400 - Fax 610 831 0215 www.wsbathcollections.com - info@wsbathcollections.com