Product Specs Sheets

Cover Page

Muci 5591

Features

- Bathroom Accessory Set
- Includes Towel Bar (23.6”), Toilet Paper Holder, Bath Hook (Set of 2), and Toilet Brush Holder
- Polished Chrome Finish
- Solid Brass Base
- Premium Metal Construction for Durability and Reliability
- Installation Hardware Included
- Individual Items Also Sold Separately (Please Refer to Related Items Below)
- Designer Collection
- Italian Design

SKU# | Option:

- Muci 5591 | Polished Chrome

Finishes:

Polished Chrome

Related Items:

- Muci 5533 | Toilet Paper Holder

*** WS Bath Collections reserves the right to revise dimensions or information on this sheet without notice**

Collection	Model |	Dimensions Metric	
Muci	Muci 5591	*1 inch = 2.54 cm* *1 inch = 25.4 mm*	WS BATH COLLECTIONS 1051 Lea Drive - Collegeville, PA 19426 Tel. 215 513 9400 - Fax 610 831 0215 www.wsbathcollections.com - info@wsbathcollections.com

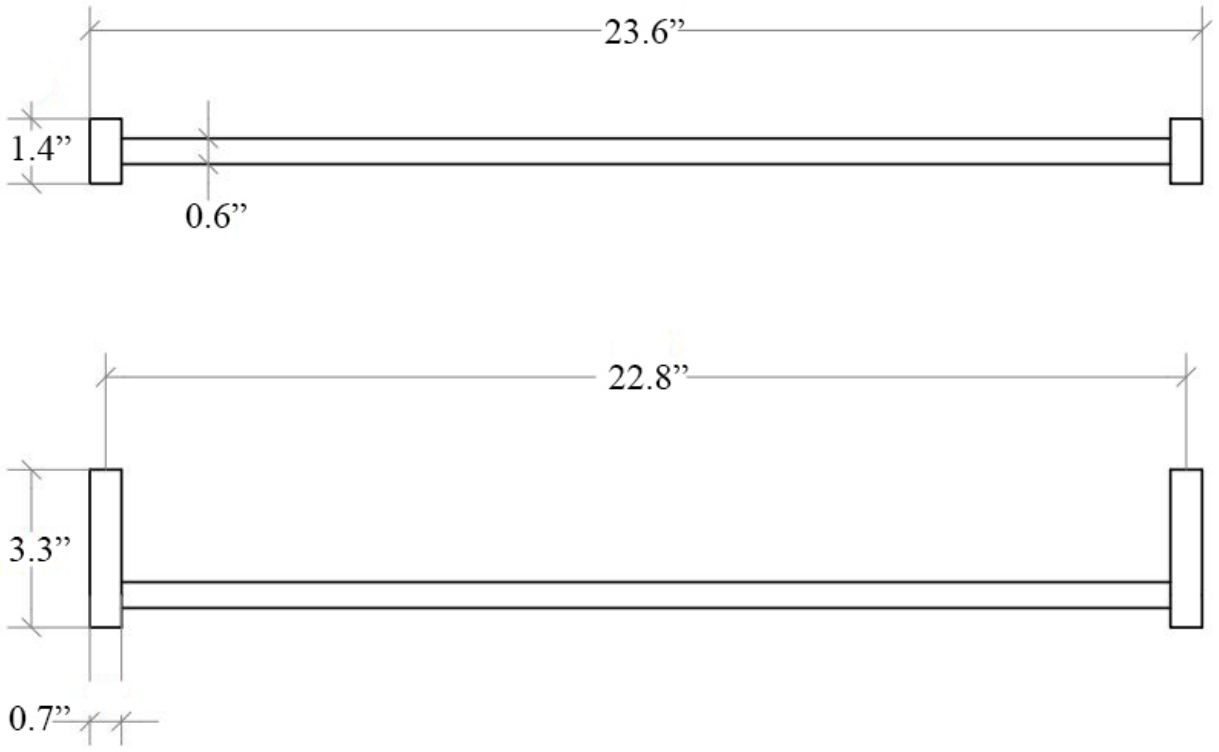

Collection	**Model**	Dimensions Metric	
Muci	Muci 5538	*1 inch = 2.54 cm* *1 inch = 25.4 mm*	WS BATH COLLECTIONS 1051 Lea Drive - Collegeville, PA 19426 Tel. 215 513 9400 - Fax 610 831 0215 www.wsbathcollections.com - info@wsbathcollections.com

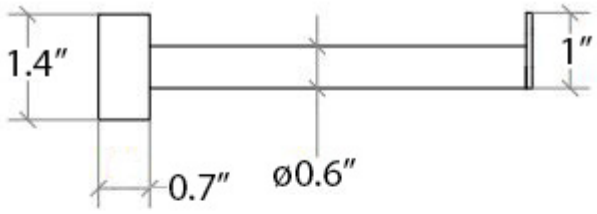

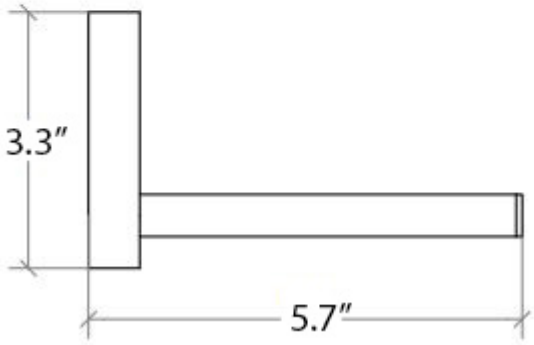

Collection	Model	Dimensions Metric	
Muci	Muci 5533	*1 inch = 2.54 cm* *1 inch = 25.4 mm*	WS® BATH COLLECTIONS 1051 Lea Drive - Collegeville, PA 19426 Tel. 215 513 9400 - Fax 610 831 0215 www.wsbathcollections.com - info@wsbathcollections.com

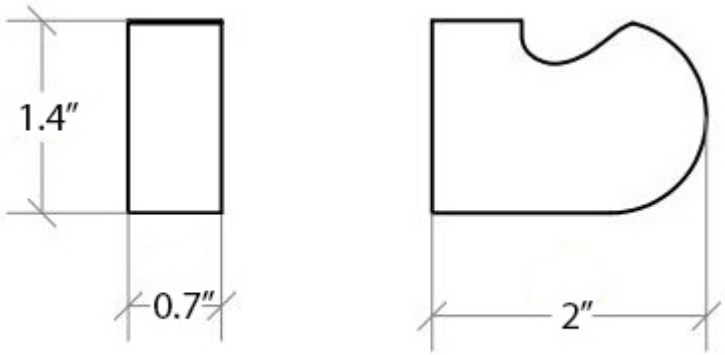

Collection	**Model**	Dimensions Metric	
Muci	Muci 5542	*1 inch = 2.54 cm* *1 inch = 25.4 mm*	WS® BATH COLLECTIONS 1051 Lea Drive - Collegeville, PA 19426 Tel. 215 513 9400 - Fax 610 831 0215 www.wsbathcollections.com - info@wsbathcollections.com

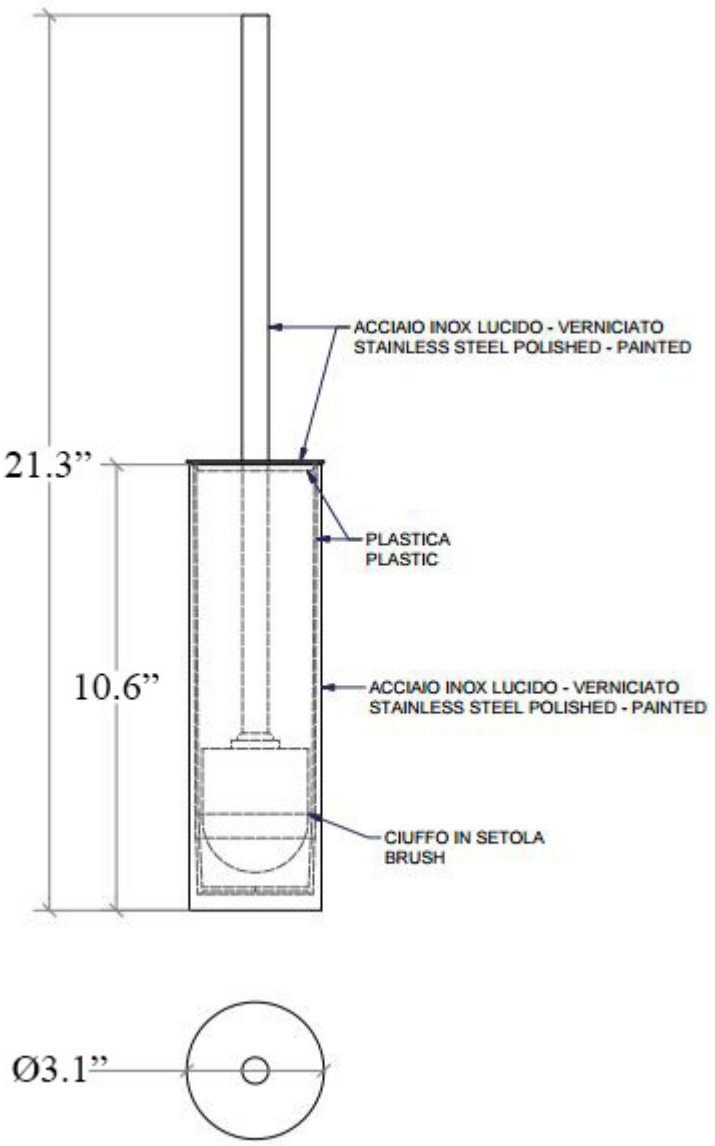

Collection	**Model**	Dimensions Metric	
Muci	Muci 5004	*1 inch = 2.54 cm* *1 inch = 25.4 mm*	WS BATH COLLECTIONS

1051 Lea Drive - Collegeville, PA 19426
Tel. 215 513 9400 - Fax 610 831 0215
www.wsbathcollections.com - info@wsbathcollections.com